INPUT
220V 50Hz 0.3A
OUTPUT
5V=2.5A
12V=1.0A
−12V=0.1A

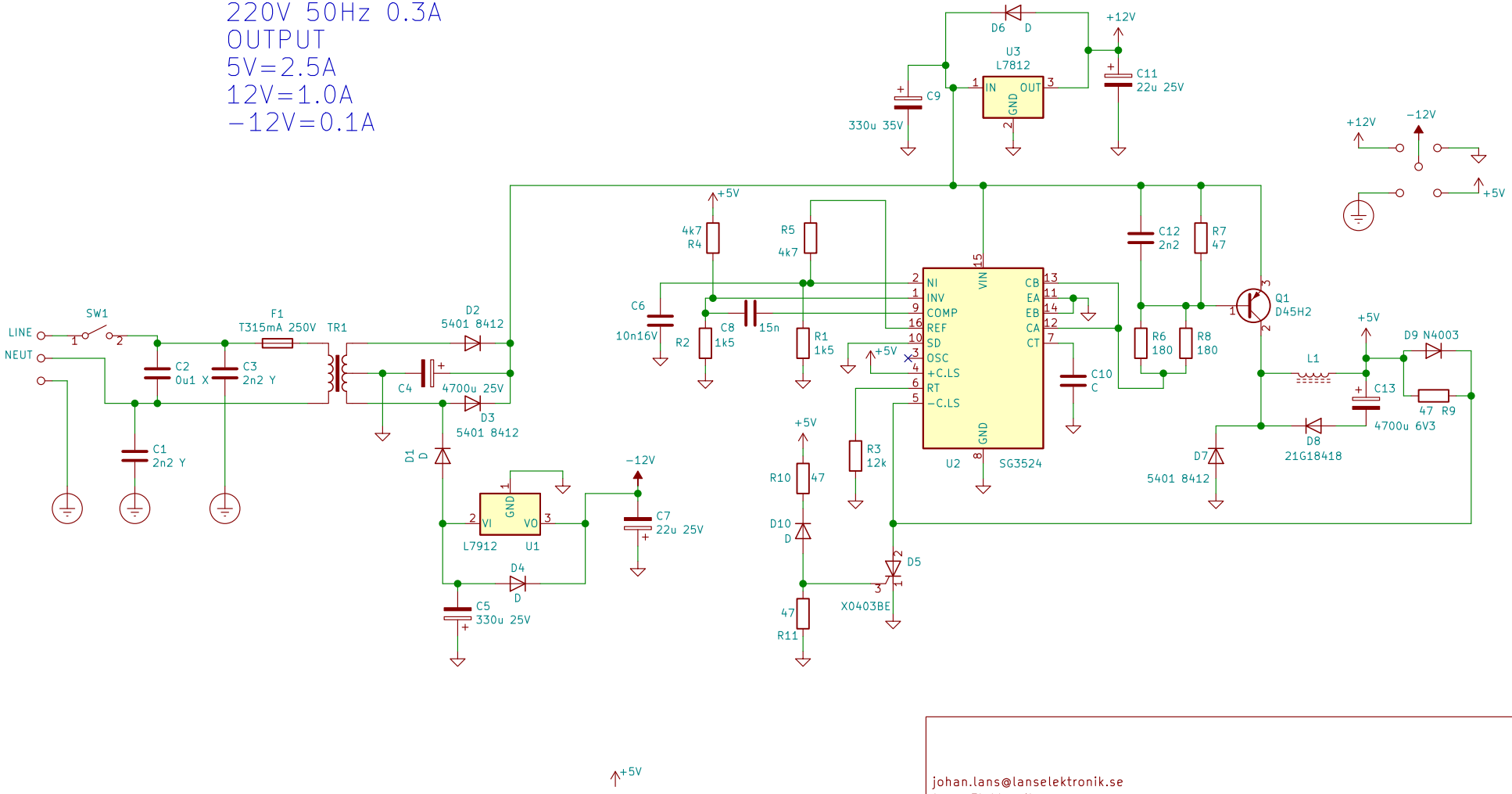

johan.lans@lanselektronik.se
Lans Elektronik

Sheet: /
File: A500_PSU.sch

Title: Amiga 500 PSU

Size: A4	Date: 2020-03-07	**Rev: 1**
KiCad E.D.A. kicad (5.1.5-0-10_14)		Id: 1/1